PEACE RIVER REGIONAL DISTRICT

Dawson Creek
PO box 810
Dawson Creek, BC
V1G 4H8

P:(250)784-3200
E:prrd.dc@prrd.bc.ca

Fort St John
9505 100th Street
Fort St John, BC
V1J 4N4

P:(250)785-8084
E:prrd.fsj@prrd.bc.ca

For Office Use:
Receipt # _____
Date Received _____
File No. _____
Sign Issued: Yes ☐ No ☐ N/A ☐

Application for Development

1. TYPE OF APPLICATION — **FEE**

- ☐ Official Community Plan Bylaw Amendment* — $ 1,500.00
- ☐ Zoning Bylaw Amendment* # — $ 1,000.00
- ☐ Official Community Plan / Zoning Bylaw Amendment combined* # — $ 2,000.00
- ☐ Temporary Use Permit* # — $ 750.00
- ☐ Temporary Use Permit Renewal — $ 350.00
- ☑ Development Permit # — $ 250.00
- ☐ Development Permit Amendment # — $ 200.00
- ☐ Development Variance Permit — $ 500.00
- ☐ Liquor Licence Referral Application — $ 150.00

* Sign is required for this application type.
# Contaminated Site Declaration Form required for this application type.

- ☐ Exclusion from the Agricultural Land Reserve — $ 1,500.00
  (Applicant responsible for additional costs associated with the advertisements, signage, and facility rental, if applicable)

2. PLEASE PRINT

Property Owner's Name	Authorized Agent of Owner (if applicable)
Scott Pomeroy	Steve Lea - Press Developments Ltd.
Address of Owner [redacted]	Address of Agent [redacted]
City/Town/Village: [redacted]	City/Town/Village: [redacted]
Postal Code: [redacted]	Postal Code: [redacted]
Telephone Number: [redacted]	Telephone Number: [redacted]
E-mail: [redacted]	E-mail: [redacted]

Notice of collection of personal information:

Personal information on this form is collected for the purpose of processing this application. The personal information is collected under the authority of the *Local Government Act* and the bylaws of the PRRD. Documentation/Information submitted in support of this application can be made available for public inspection pursuant to the *Freedom of Information and Protection of Privacy Act.*

3. PROPERTY DESCRIPTION

Please list the full Legal Description and PID of **each property** under application		
Legal Description	**PID**	**Area of Each Lot**
Lot 3, Sec25, TP83, R19, W6M, PRD, Plan EPP56555	030761344	1.83 ha./~~acres~~
		ha./acres
		ha./acres
		TOTAL AREA 1.83 ha./~~acres~~

4. CIVIC ADDRESS OR LOCATION OF PROPERTY: Enterprise Way

5. PARTICULARS OF PROPOSED AMENDMENT

Please check the box(es) that apply to your application type:

[ ] Official Community Plan (OCP) Bylaw amendment:
Proposed Land Use: _____

[ ] Zoning Bylaw amendment:
Proposed Land Use: _____

[ ] Development Variance Permit – describe proposed variance request:

_____

_____

[ ] Temporary Use Permit or Temporary Use Permit Renewal – describe proposed use:

_____

_____

[✓] Development Permit or Development Permit Amendment

[ ] Liquor Licence Referral Application

6. Describe the existing uses and buildings on the subject property:

Vacant lot

7. Describe your proposal. Attach a separate sheet if necessary:

Placement of open storage shed

8. Describe the landscaping being proposed on the property:

None

9. Reasons and comments in support of the application. Attach a separate sheet if necessary:

Use of a open storage shed on the site follow the I1 Light Industrial zoning of the area.

10. Describe the proposed and/or existing means of sewage disposal for the property:

N/A

11. Describe the proposed and/or existing means of water supply for the property:

N/A

THE FOLLOWING INFORMATION IS REQUIRED FOR ALL APPLICATIONS:

14. Proof of ownership of the subject property or properties dated no more than thirty (30) days prior to the date of application. (For example: State of Title Certificate, BC Land Title Office Property Title Search, Corporate Registry Search, or recent Property Tax Notice.)

15. A Sketch Plan of the subject property or properties, showing the following:
    (a) the legal boundaries and dimensions of the subject property;
    (b) boundaries, dimensions, and area of any proposed lots (if subdivision is being proposed);
    (c) the location and size of existing buildings and structures on the subject property, with distances to property lines;
    (d) the location and size of any proposed buildings, structures, or additions thereto, with distances to property lines;
    (e) the location of any existing sewage disposal systems;
    (f) the location of any existing or proposed water source;
    (g) the location and dimensions of all accesses and egresses to the property including driveways;
    (h) any existing landscaping or vegetation;
    (i) any existing landscaping or vegetation to be removed; and
    (j) any new landscaping or vegetation proposed.

ADDITIONAL OR MORE DETAILED INFORMATION MAY BE REQUESTED BY THE PEACE RIVER REGIONAL DISTRICT FOLLOWING REVIEW OF YOUR APPLICATION.

If it is necessary for the property boundaries and the location of buildings and structures to be more accurately defined, a survey plan prepared by a British Columbia Land Surveyor may be required.

Security

Security may be required for the following application types as per the Development Approval Procedures Bylaw No. 2558, 2024:

- Temporary Use Permit; and
- Development Permit.

Public Notice Signs – Development Approval Procedures Bylaw No. 2558, 2024

8.2 A Public Notice sign shall be posted on the subject property for any parcel that is subject to an application for:

a) Amendment to an Official Community Plan and/or Zoning Bylaw;

b) Temporary Use Permit; or

c) Exclusion from Agricultural Land Reserve, in compliance with the Agriculture Land Commission Act and Regulations.

8.3 Failure to post and keep the sign in accordance with this bylaw may result in a delay or postponement of the application.

8.4 Any additional notification costs incurred by the Regional District, as a result of the Applicant failing to post the required sign, shall be payable by the Applicant prior to advertising of the Public Hearing or delivery of public notifications.

8.5 All Public Notice signs must:

a) Be placed to maximize its visibility to those travelling along the main highway by which the property is accessed;

b) Be erected on the property a minimum of fourteen (14) days prior to the Board considering the application, and the Applicant must submit to the Regional District a photograph clearly showing the sign posted on the property in accordance with this bylaw;

c) Be placed in a manner that does not interfere with pedestrian or vehicle traffic flow, or create a potential hazard by obstructing visibility from a highway;

d) Be installed in a safe, sturdy manner, capable of withstanding typical wind and other weather conditions;

e) Remain in place continuously until the application has been closed; and f) Applicants are encouraged to dispose of the signs by recycling them.

16. I / We the undersigned hereby declare that the information provided in this application is complete and is, to the best of my / our knowledge, a true statement of the facts related to this application.

[redacted] Nov 6 2026

Signature of Owner Date signed

_____ _____

Signature of Owner Date signed

17. **AGENT'S AUTHORIZATION**

If you have an agent act on your behalf in submission of this application, the following authorization **MUST** be signed by **ALL** property owners.

I / We Scott Pomeroy (name of landowner) and _____ (name of landowner) hereby authorize	
Steve Lea - Press Developments Ltd. (name of agent) to act on my/our behalf regarding this application.	
Signature of Owner: [redacted]	Date: Nov 6 2026
Signature of Owner:	Date:

PEACE RIVER REGIONAL DISTRICT

CONTAMINATED SITE DECLARATION FORM

I, Scott Pomeroy, hereby acknowledge that the *Environmental Management Act*, 2003, as amended, is effective as of February 1, 2021.

Legal Description(s):

Lot 3, Sec25, TP83, R19, W6M, PRD, Plan EPP56555

Please check only one:

☒ I have read Schedule 2 and based on my personal knowledge of the property in question, I do not believe that it is or has been used for any of the industrial or commercial purposes and activities specified in Schedule 2 of the regulations. Accordingly, I elect not to complete and submit a 'site disclosure statement', as outlined in Section 40.(1) of the *Act*.

☐ I have read Schedule 2 and one or more of the identified purposes or activities is or has occurred on the land(s) legally described above.
*Please contact staff to submit a "site disclosure statement" at planning@prrd.bc.ca

I further acknowledge that this declaration does not remove any liability, which may otherwise be applicable under the legislation.

[redacted] 06/11/2026
Owner/Agent *dd mm yyyy*

_____ ____/____/____
Owner/Agent *dd mm yyyy*

For more information, please visit the ministry's Identification of Contaminated Sites webpage or e-mail SiteID@gov.bc.ca

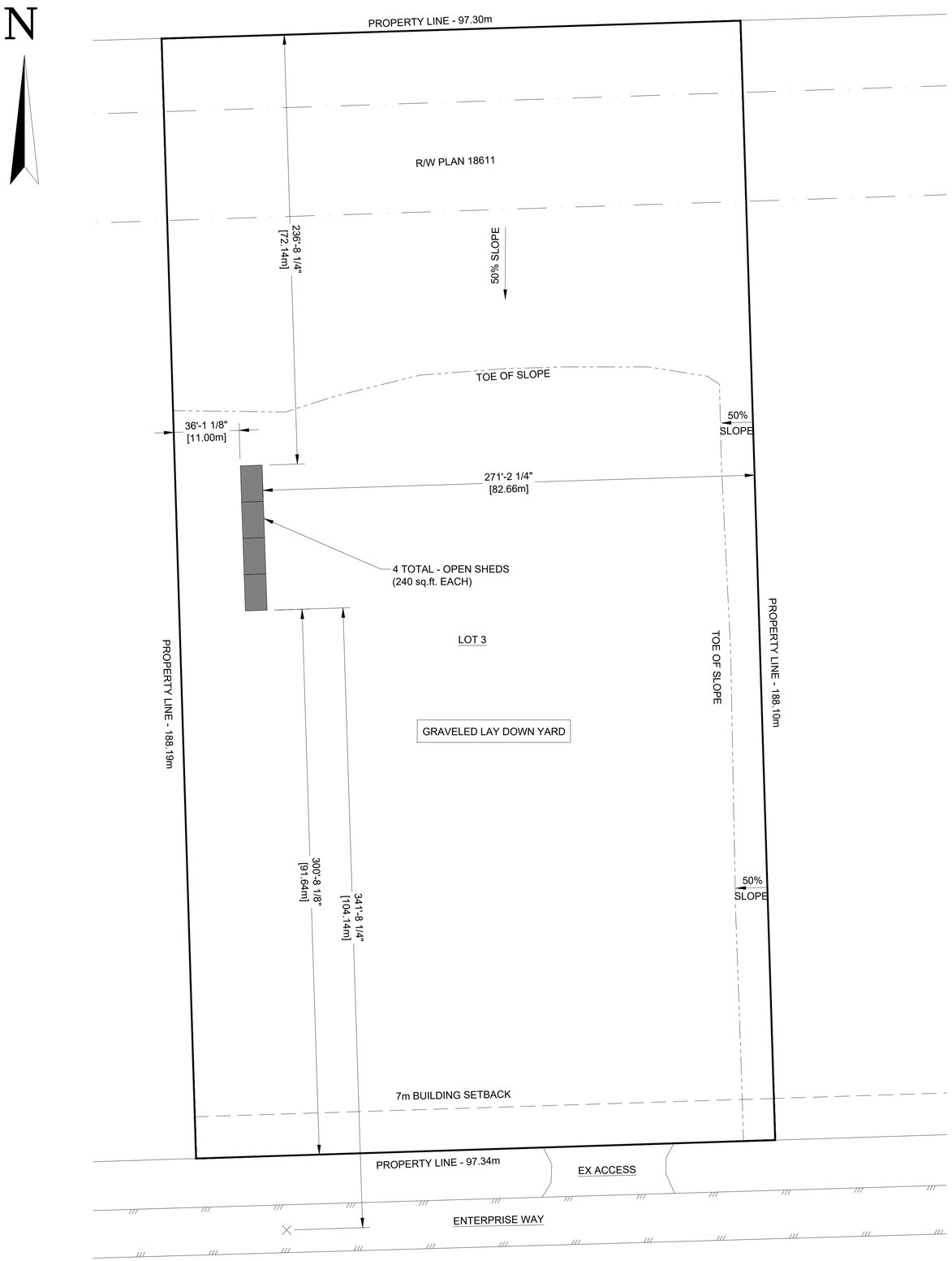

ZONING REQUIREMENTS
(ZONING BYLAW No. 1343, 2001, PRRD)

ZONING	I1 - LIGHT INDUSTRIAL	
LEGAL DESCRIPTION	LOT 3, SEC 25, TP 83, R19, W6M, PRD PLAN EPP56555	
CIVIC ADDRESS	NON ASSIGNED	
USE OF BUILDING	STORAGE SHEDS	
BUILDING FOOTPRINT	89.20 m2 (960 sq.ft.)	
	EXISTING	PERMITTED
LOT AREA	1.83 ha	min. 1.80 ha
SET BACKS/YARD	PROPOSED	PERMITTED
FRONT (S - ENTERPRISE WAY)	91.64 m	min. 7.00 m
SIDE (E)	82.66 m	0.00 m
SIDE (W)	11.50 m	0.00 m
REAR (N)	72.14 m	0.00 m
BUILDING HEIGHT	3.73 m (12'-3")	max 20.00 m

BUILDING CODE REVIEW
(BCBC 2024)

MAJOR OCCUPANCY	GROUP F DIVISION 3
CODE REFERENCE	9.10
BUILDING AREA	89.20 m2
NUMBER OF STORIES	1 STOREY
NUMBER OF STREETS	1 STREET
SPRINKLERED	NO
FIRE ALARM	NO
SIAMESE CONNECTION	NO
CONSTRUCTION TYPE	COMBUSTIBLE & NON COMBUSTABLE
CONSTRUCTION REQ'D	
FLOOR	3/4 HR F.R.R.
ROOF	3/4 HR F.R.R.
BEARING	3/4 HR F.R.R.

SPATIAL SEPARATION	TABLE 3.2.3.1 - B			
	NORTH	EAST	SOUTH	WEST
LIMITING DISTANCE	72.14 m	82.66 m	100.14 m	11.00 m
WALL AREA	13.52 m2	89.20 m2	13.52 m2	91.04 m2
OPENING AREA	0.00 m2	0.00 m2	0.00 m2	78.72 m2
% OPENINGS PROPOSED	0.0 %	0.0 %	0.0 %	86.5 %
% OPENINGS PERMITTED	100 %	100 %	100 %	100 %
CONSTRUCTION TYPE	NON-COMBUSTABLE	NON-COMBUSTABLE	NON-COMBUSTABLE	NON-COMBUSTABLE
CLADDING MATERIAL	NON-COMBUSTABLE	NON-COMBUSTABLE	NON-COMBUSTABLE	NON-COMBUSTABLE
BLDING FACE PROPOSED	NON-RATED F.R.R.	NON-RATED F.R.R.	NON-RATED F.R.R.	NON-RATED F.R.R.
BLDING FACE PERMITTED	NON-RATED F.R.R.	NON-RATED F.R.R.	NON-RATED F.R.R.	NON-RATED F.R.R.

PRESS DEVELOPMENTS

THE DRAWINGS AND DIMENSIONS AS SHOWN ARE BASED ON ESTIMATED EXISTING CONDITIONS AND MEASUREMENTS. ALL DESIGNS AND DIMENSIONS HEREIN ARE SUBJECT TO CHANGE PER ACTUAL AND CONFIRMED SITE CONDITIONS AND MEASUREMENTS.

OWNER AND CONTRACTOR TO VERIFY ALL DIMENSIONS, STRUCTURAL DETAILS, BUILDING CODES, AND GRADE REQUIREMENTS.

CONTRACTOR SHALL VERIFY ALL CONDITIONS AND DIMENSIONS AT THE JOB SITE AND NOTIFY THE DESIGNER OF ANY DIMENSIONAL ERRORS, OMISSIONS, OR DISCREPANCIES BEFORE BEGINNING OR FABRICATING ANY WORK.

OWNER WILL TAKE NECESSARY PRECAUTIONS TO REMOVE OR RELOCATE ITEMS OF VALUE TO BE REUSED AND / OR SAVED, OR IN ANY DANGER OR BEING DAMAGED DUE TO CONSTRUCTION PROCESS.

ISSUES

No.	DATE	DESCRIPTION
1	NOV 10, 26	PERMIT APP.

REVISIONS

No.	DATE	DESCRIPTION

PROJECT: LOT 3 - ENTERPRISE WAY - SHEDS

CLIENT: STRAIT

DRAWING TITLE: SITE PLAN

DATE: NOVEMBER 3, 2026

SCALE: 1/32" = 1'-0"

DRAWN: SWL

PROJECT No.: 26013

DRAWING No.: A1

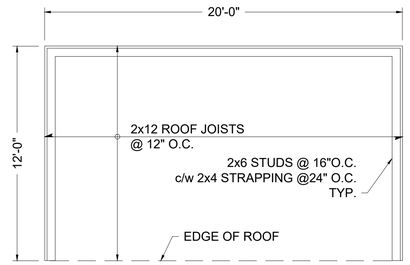

NOTE:
NO FOUNDATION. SHEDS SIT DIRECTLY ON GRAVEL SURFACE

FLOOR PLAN

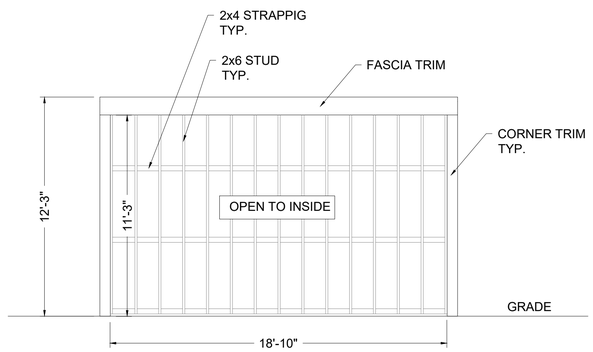

FRONT ELEVATION (WEST)

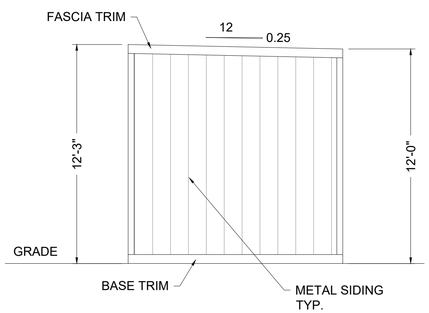

SIDE ELEVATION (NORTH)

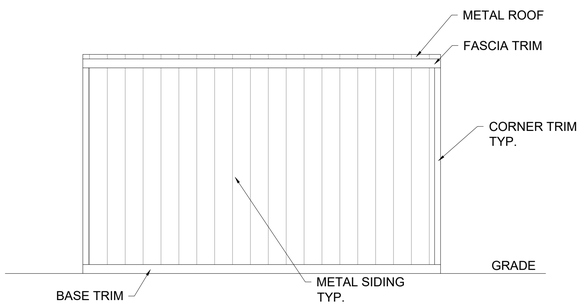

REAR ELEVATION (EAST)

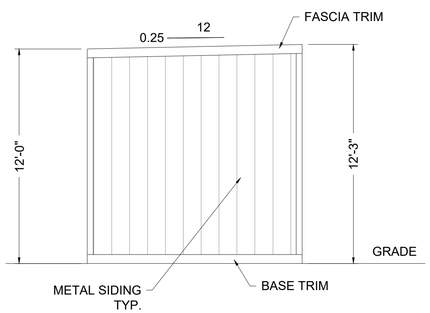

SIDE ELEVATION (SOUTH)

PRESS DEVELOPMENTS

THE DRAWINGS AND DIMENSIONS AS SHOWN ARE BASED ON ESTIMATED EXISTING CONDITIONS AND MEASUREMENTS. ALL DESIGNS AND DIMENSIONS HEREIN ARE SUBJECT TO CHANGE PER ACTUAL AND CONFIRMED SITE CONDITIONS AND MEASUREMENTS.

OWNER AND CONTRACTOR TO VERIFY ALL DIMENSIONS, STRUCTURAL DETAILS, BUILDING CODES, AND GRADE REQUIREMENTS.

CONTRACTOR SHALL VERIFY ALL CONDITIONS AND DIMENSIONS AT THE JOB SITE AND NOTIFY THE DESIGNER OF ANY DIMENSIONAL ERRORS, OMISSIONS, OR DISCREPANCIES BEFORE BEGINNING OR FABRICATING ANY WORK.

OWNER WILL TAKE NECESSARY PRECAUTIONS TO REMOVE OR RELOCATE ITEMS OF VALUE TO BE REUSED AND / OR SAVED, OR IN ANY DANGER OR BEING DAMAGED DUE TO CONSTRUCTION PROCESS.

ISSUES

No.	DATE	DESCRIPTION
1	NOV 10, 26	PERMIT APP.

REVISIONS

No.	DATE	DESCRIPTION

PROJECT: LOT 3 - ENTERPRISE WAY - SHEDS

CLIENT: STRAIT

DRAWING TITLE: FLOOR PLAN AND ELEVATIONS

DATE: NOVEMBER 3, 2026

SCALE: 1/4" = 1'-0"

DRAWN: SWL

PROJECT No.: 26013

DRAWING No.: A2